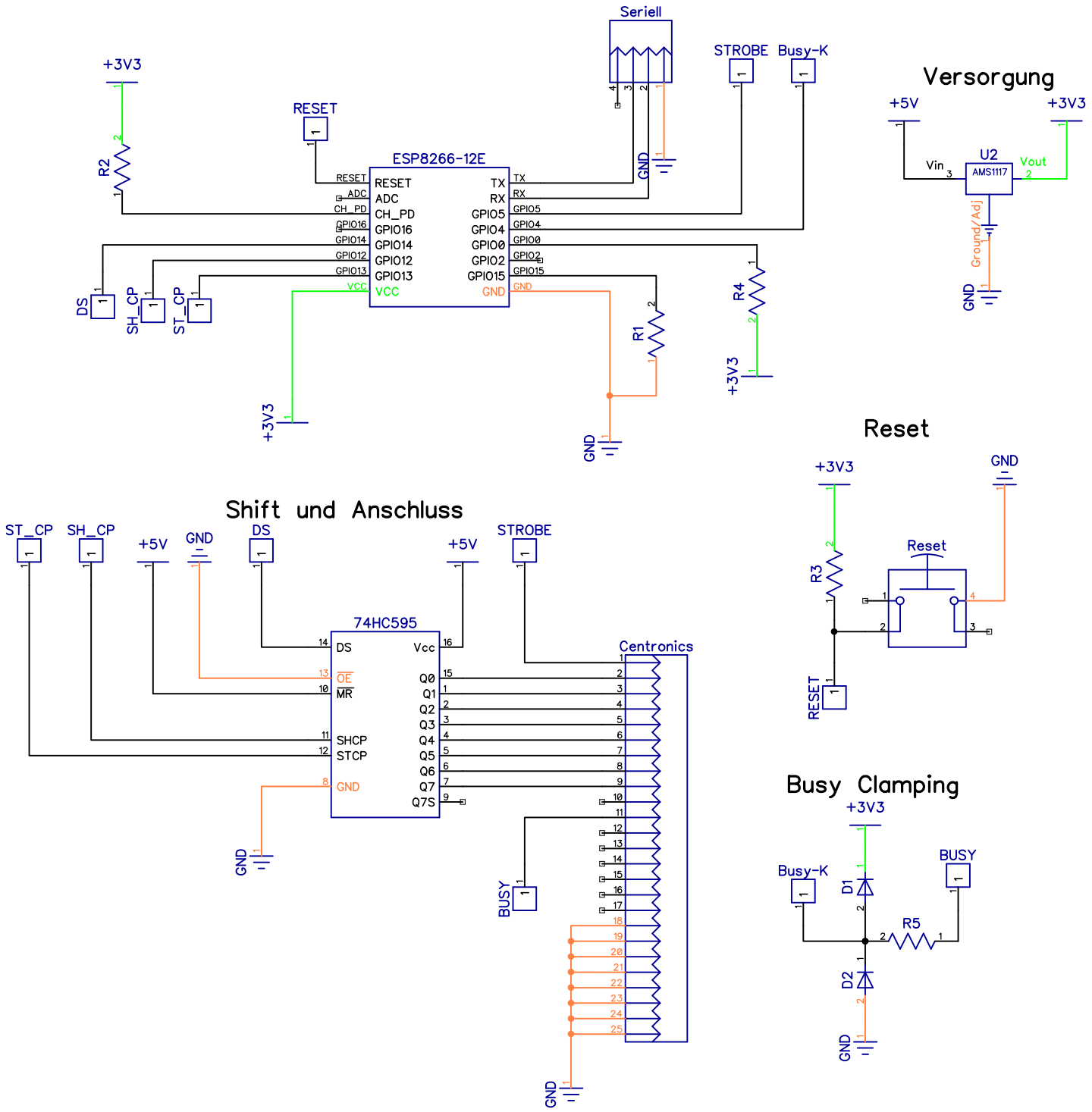
Seriell
STROBE
Busy-K
+3V3
RESET
R2
ESP8266-12E
RESET
ADC
CH_PD
GPIO16
GPIO14
GPIO12
GPIO13
VCC
TX
RX
GPIO5
GPIO4
GPIO0
GPIO2
GPIO15
GND
DS
SH_CP
ST_CP
R1
R4
+3V3
GND
Versorgung
+5V
+3V3
U2
AMS1117
Vin
Vout
Ground/Adj
GND
Reset
+3V3
GND
R3
Reset
RESET
Shift und Anschluss
ST_CP
SH_CP
+5V
GND
DS
+5V
STROBE
74HC595
DS
Vcc
OE
MR
SHCP
STCP
GND
Q0
Q1
Q2
Q3
Q4
Q5
Q6
Q7
Q7S
Centronics
BUSY
GND
Busy Clamping
+3V3
Busy-K
BUSY
D1
R5
D2
GND